WESSEX INDUSTRIAL DOORS

Sliding Folding Shutter

Wessex Sliding Shutters are horizontally folding doors with panels constructed from galvanised steel and jointed together by substantial galvanised steel hinge sections. When open, the panels fold into a minimum amount of space on either one or both sides of the opening as required.
Doors are supplied with power or manual operation.

Sliding Shutters

Sliding Shutters

Wessex Sliding Shutters are horizontally folding doors with panels constructed from galvanised steel and jointed together by substantial galvanised steel hinge sections.

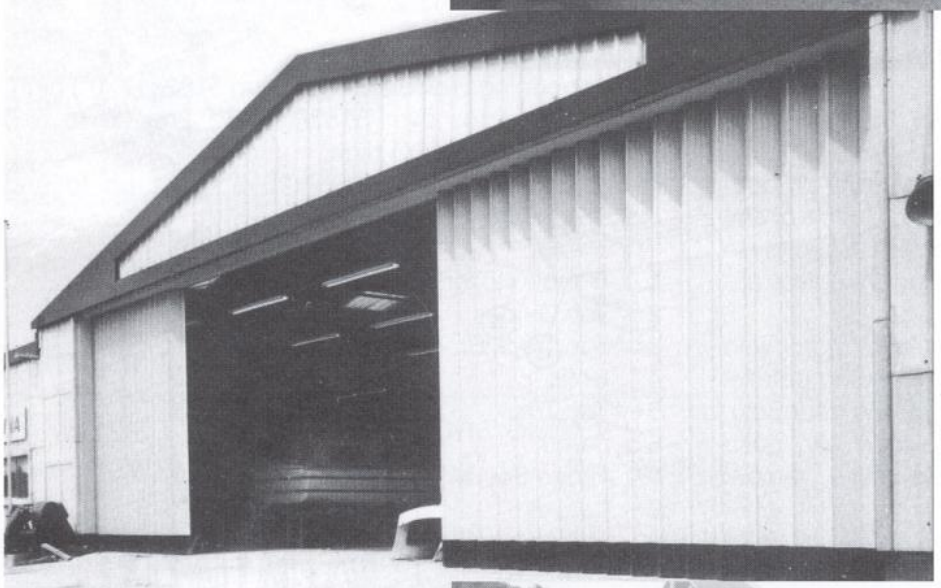

When open, the panels fold into a minimum amount of space on either one or both sides of the opening as required.

Doors are supplied with power or manual operation.

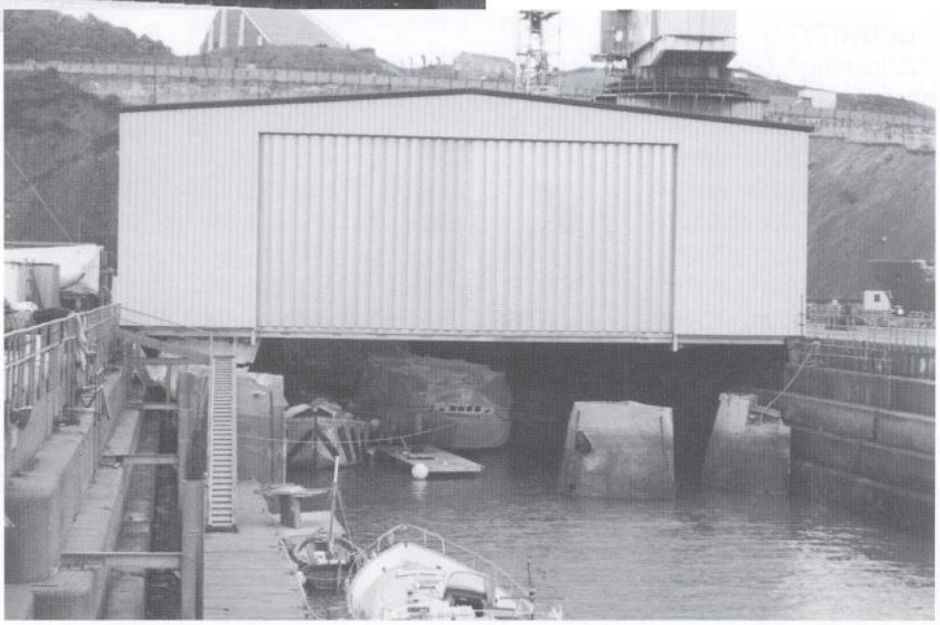

General Information

CONSTRUCTION

Comprises galvanised steel collapsible gate having vertical pickets interconnected by rectangular steel bars acting on the lazy tong principle. Leaves 305 wide (12") arranged in pairs hung from the front of each picket are hinged to adjacent leaves providing a heavy duty horizontal folding door assembly.

The door complete suspended from a lintel mounted heavy duty rolled steel top track by double rollers fitted to alternate pickets. Guide Spigots at the base of each picket locate in a substantial floor track. The whole door assembly fabricated from galvanised steel.

OPERATION

Doors can be arranged to bunch to either one or both sides of an opening. The unfixed vertical edge of any section being fitted with a rebated lead post assembly to which internal and external operating handles are fitted.

When power operated, a geared electric motor with torque limiter drives an endless chain running parallel to the overhead track and coupled to the leadpost. Control of power operation is provided by push button operated switches with alternative remote systems being available if required.

SECURITY

Padlocking facility fitted inside and outside. An alternative lever lock system can be incorporated.

Installation Arrangements

1. Hung behind lintel and bunching behind the jambs of the structural opening.
2. Hung beneath lintel and bunching within structural opening.
3. Hung behind lintel and bunching within structural opening.

Dependent upon opening construction, provision may be made for a combination of the three standard arrangements or mounting a door externally.

Sizes and types

1 Double Rollers
2 Top Guides
3 Top Track Brackets
4 Soffit
5 Top Track
6 Jamb
7 Hinge Section
8 Leaves
9 Lattices
10 Leadpost
11 Bottom Guide Spigots
12 Picket and hinge sections
13 Bottom Track
14 Sump (if required)

General Arrangement

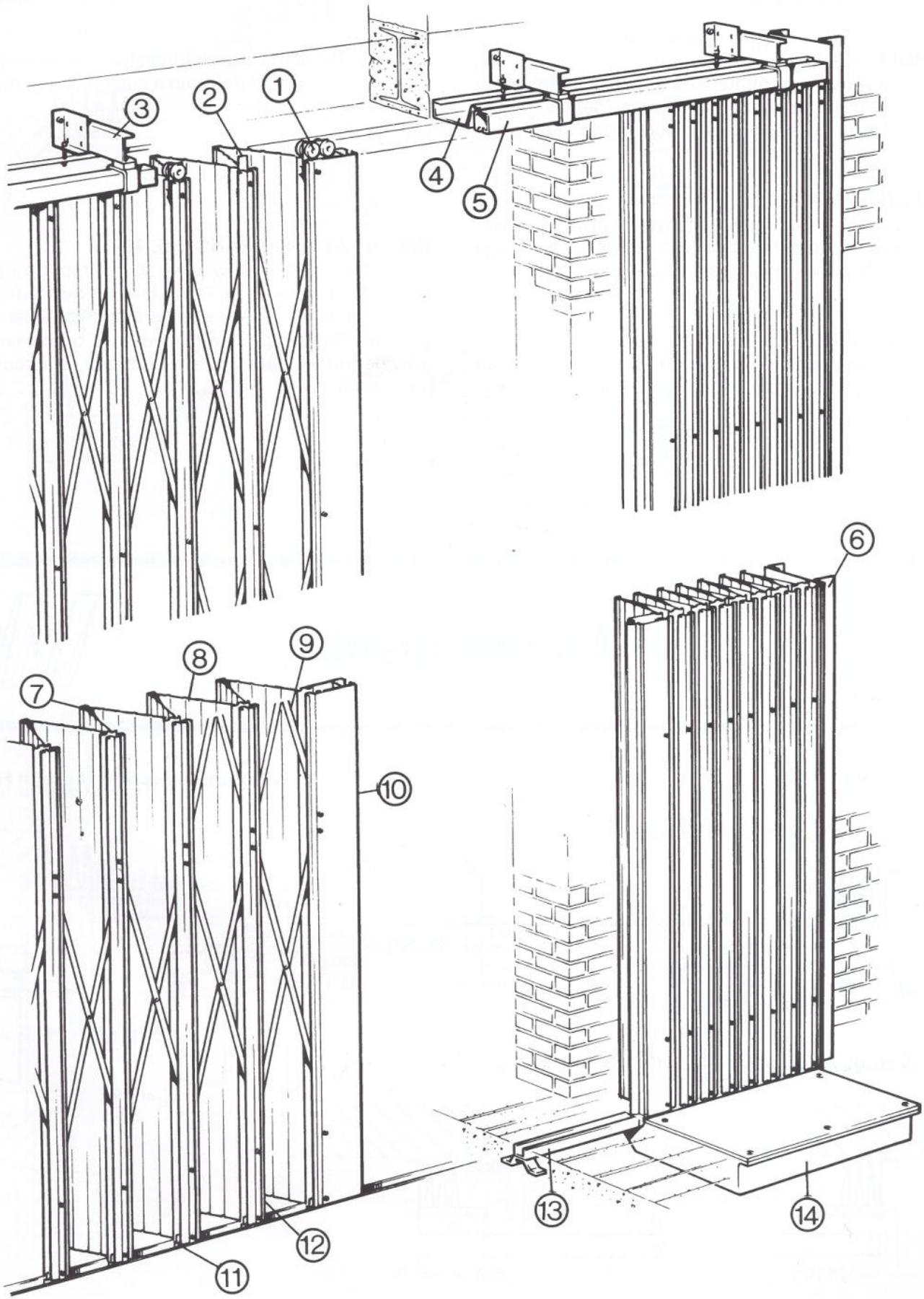

Typical Arrangements

SINGLE DOORS
The single doors illustrated are bunched to the left as viewed from inside. The reverse details would apply if they were required to bunch on the right.

BI-PARTING DOORS
Normally arranged to bunch equally on both sides, however, unequal bunching and opening coverage may be provided in special circumstances.

FREE MOVING SECTIONS
An additional section arranged for locking at both ends and which can bunch in any position, may be provided for some manual installations. Advice will be given on this feature when a customer's particular requirement is known.

INSTALLATION ARRANGEMENTS
The illustrations show the three most popular methods of installation. Provision can be made for a combination of these arrangements together with external mounting for which we shall be pleased to provide further data when customer's requirements are known.

Arrangement 1

Plan Single Doors

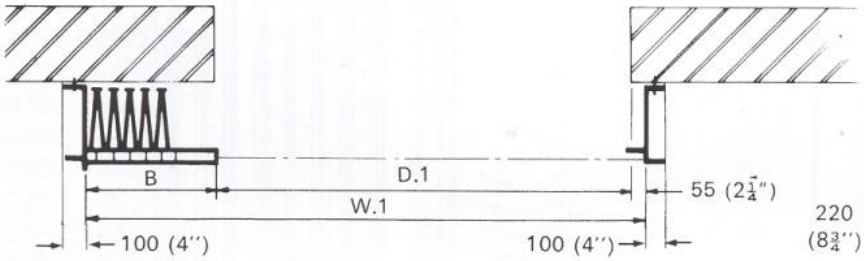

Plan Bi-Parting Doors

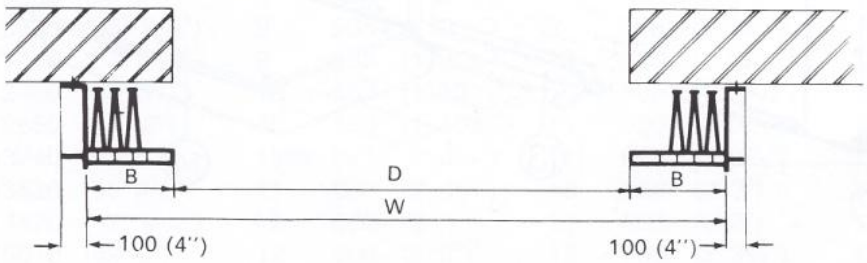

Alternative Section through Head

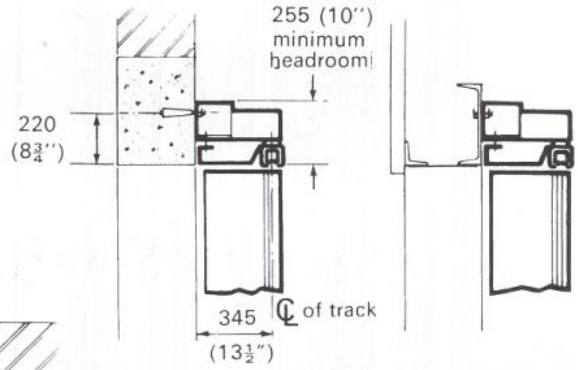

Arrangement 2

Plan Single Doors

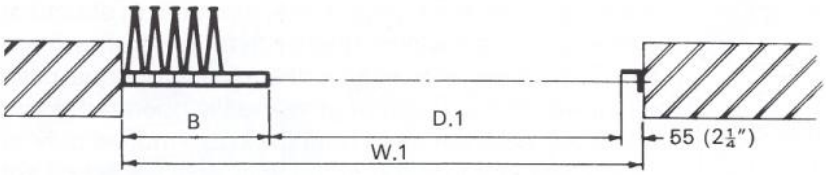

Alternative Section through Head

HG details only

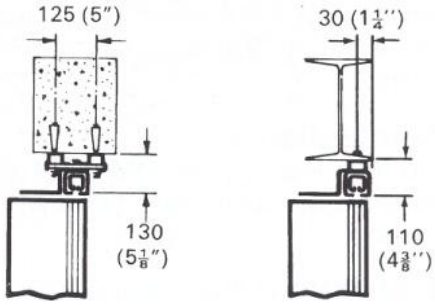

Plan Bi-Parting Doors

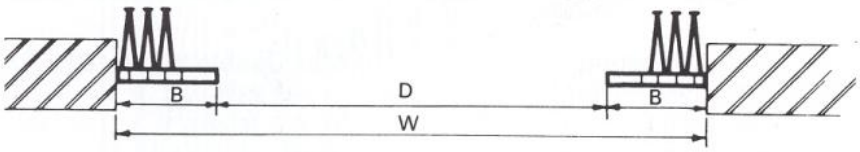

HH & HI details only

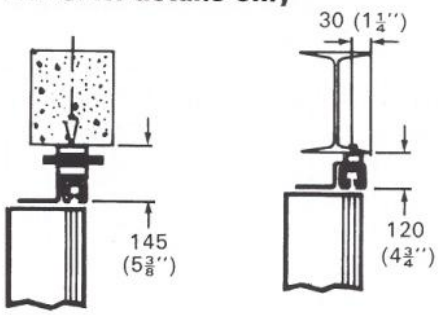

Arrangement 3

Plan Single Doors

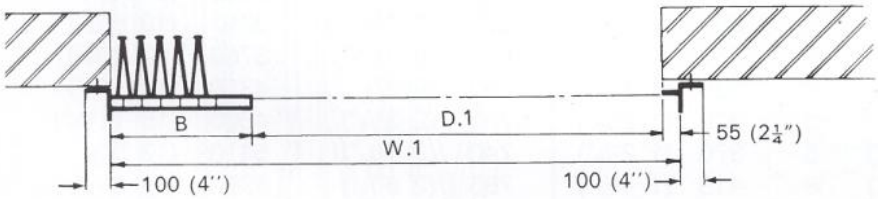

Alternative Section through Head

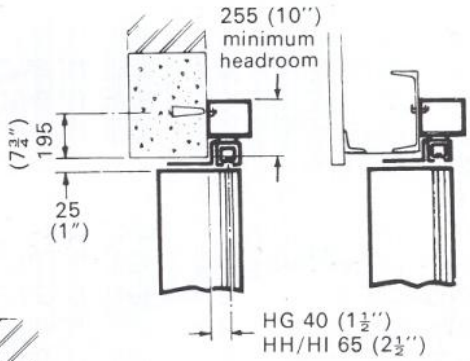

Plan Bi-Parting Doors

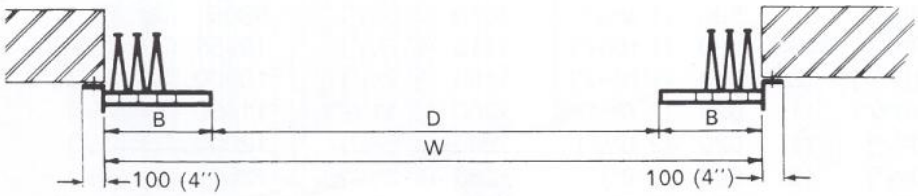

HG Installations

To find bunched DIM 'B'

ARRANGEMENT 1

Read from line of table where D.1 (or D) dimension shown is equal to or greater than the width of structural opening.

ARRANGEMENT 2

Read from line of table where W.1 (or W) dimension shown is equal to or greater than the width of structural opening.

ARRANGEMENT 3 -SINGLE DOOR

Read from line of table where W.1 (or W) dimension shown is equal to or greater than the width of structural opening plus 55 (2˘).

ARRANGEMENT 3 - BI-PARTING DOOR

Read from line of table where W.1 (or W) dimension shown is equal to or greater than the width of structural opening. Where widths greater than those shown are required, please enquire for further details. Unequal pairs of leaves can be used on all manually operated doors and electrically operated doors with two motors only, in which case the junction of the lead post will be off set accordingly. It should be noted that a single motor is supplied as standard on all doors with six pairs of leaves or less each side and therefore the number of pairs of leaves must be equal on each side of the opening in this arrangement.

Single HG installations only

Max Ext "WI"		Prs	Bunching		Max Usable Width "DI"	
1350	(4' 5 1/8")	2	250	(9 3/4")	1045	(3' 5 1/8")
1940	(6' 4 3/8")	3	290	(11 3/8")	1595	(5' 2 3/4")
2530	(8' 3 5/8")	4	330	(1' 1")	2145	(7' 0 3/8")
3120	(10' 2 7/8")	5	370	(1' 2 5/8")	2695	(8' 10")
3710	(12' 2 1/8")	6	415	(1' 4 1/4")	3240	(10' 7 5/8")
4300	(14' 1 3/8")	7	455	(1' 5 7/8")	3790	(12' 5 1/4")
4890	(16' 0 5/8")	8	495	(1' 7 1/2")	4340	(14' 2 7/8")
5480	(17' 11 7/8")	9	535	(1' 9 1/8")	4890	(16' 0 1/2")
6075	(19' 11 1/8")	10	580	(1' 10 3/4")	5440	(17' 10 1/8")
6665	(21' 10 3/8")	11	620	(2' 0 3/8")	5990	(19' 7 3/4")
7255	(23' 9 5/8")	12	660	(2' 2")	6540	(21' 5 3/8")
7845	(25' 8 7/8")	13	700	(2' 3 5/8")	7090	(23' 3")

Bi-parting HG installations only

Max Ext "W"		Prs	Bunching		Prs	Bunching		Bunch Totals		Max Usable Width "D"	
2610	(8' 6 3/4")	2	250	(9 3/4")	2	250	(9 3/4")	500	(1' 7 1/2")	2110	(6' 11 1/4")
3200	(10' 6")	2	250	(9 3/4")	3	290	(11 3/8")	540	(1' 9 1/8")	2660	(8' 8 7/8")
3790	(12' 5 1/4")	3	290	(11 3/8")	3	290	(11 3/8")	580	(1' 10 3/4")	3210	(10' 6 1/2")
4380	(14' 4 1/2")	3	290	(11 3/8")	4	330	(1' 1")	620	(2' 0 3/8")	3760	(12' 4 1/8")
4970	(16' 3 3/4")	4	330	(1' 1")	4	330	(1' 1")	660	(2' 2")	4310	(14' 1 3/4")
5560	(18' 3")	4	330	(1' 1")	5	370	(1' 2 5/8")	700	(2' 3 5/8")	4860	(15' 11 3/8")
6150	(20' 2 1/4")	5	370	(1' 2 5/8")	5	370	(1' 2 5/8")	740	(2' 5 1/4")	5410	(17' 9")
6745	(22' 1 1/2")	5	370	(1' 2 5/8")	6	415	(1' 4 1/2")	785	(2' 6 7/8")	5960	(19' 6 5/8")
7335	(24' 0 3/4")	6	415	(1' 4 1/4")	6	415	(1' 4 1/4")	830	(2' 8 1/2")	6505	(21' 4 1/4")
7925	(26' 0")	6	415	(1' 4 1/4")	7	455	(1' 5 7/8")	870	(2' 10 1/8")	7055	(23' 1 7/8")
8515	(27' 11 1/4")	7	455	(1' 5 7/8")	7	455	(1' 5 7/8")	910	(2' 11 3/4")	7605	(24' 11 1/2")
9105	(29' 10 1/2")	7	455	(1' 5 7/8")	8	495	(1' 7 1/2")	950	(3' 1 3/8")	8155	(26' 9 1/8")
9695	(31' 9 3/4")	8	495	(1' 7 1/2")	8	495	(1' 7 1/2")	990	(3' 3")	8705	(28' 6 3/4")
10285	(33' 9")	8	495	(1' 7 1/2")	9	535	(1' 9 1/8")	1030	(3' 4 5/8")	9253	(30' 4 3/8")
10875	(35' 8 1/4")	9	535	(1' 9 1/8")	9	535	(1' 9 1/8")	1070	(3' 6 1/4")	9805	(32' 2")
11470	(37' 7 1/2")	9	535	(1' 9 1/8")	10	580	(1'10 3/4")	1115	(3' 7 7/8")	10355	(33' 11 5/8")
12060	(39' 6 3/4")	10	580	(1' 10 3/4")	10	580	(1'10 3/4")	1160	(3' 9 1/2")	10900	(35' 9 1/4")
12650	(41' 6")	10	580	(1' 10 3/4")	11	620	(2' 0 3/8")	1200	(3' 11 1/8")	11450	(37' 6 7/8")
13240	(43' 5 1/4")	11	620	(2' 0 3/8")	11	620	(2' 0 3/8")	1240	(4' 0 3/4")	12000	(39' 4 1/2")
13830	(45' 4 1/2")	11	620	(2' 0 3/8")	12	660	(2' 2")	1280	(4' 2 3/8")	12550	(41' 2 1/8")
14420	(47' 4 3/4")	12	660	(2' 2")	12	660	(2' 2")	1320	(4' 4")	13100	(42' 11 3/4")
15010	(49' 3")	12	660	(2' 2")	13	700	(2' 3 5/8")	1360	(4' 5 5/8")	13650	(44' 9 3/8")
15600	(51' 2 1/4")	13	700	(2' 3 5/8")	13	700	(2' 3 5/8")	1400	(4' 7 1/4")	14200	(46' 7")

HH/HI Installations

To find bunched DIM 'B'

ARRANGEMENT 1

Read from line of table where D.1 (or D) dimension shown is equal to or greater than the width of structural opening.

ARRANGEMENT 2

Read from line of table where W.1 (or W) dimension shown is equal to or greater than the width of structural opening.

ARRANGEMENT 3 - SINGLE DOOR

Read from line of table where W.1 (or W) dimension shown is equal to or greater than the width of structural opening plus 55 (2").

ARRANGEMENT 3 - BI-PARTING DOOR

Read from line of table where W dimension shown is equal to or greater than the width of structural opening. Where widths greater than those shown are required, please enquire for further details. Unequal pairs of leaves can be used on all manually operated doors with two motors only, in which case the junction of the lead post will be off set accordingly. It should be noted that a single motor is supplied as standard on all doors with six pairs of leaves or less each side and therefore the number of pairs of leaves must be equal on each side of the opening in this arrangement.

Single HH/HI installations only

Max Ext "WI"		Prs	Bunching		Max Usable Width "DI"	
1365	(4' 5 3/4")	2	265	(10 3/8")	1045	(3' 5 1/8")
1960	(6' 4 1/4")	3	310	(1' 0 1/4")	1595	(5' 2 3/4")
2560	(8' 4 3/4")	4	360	(1' 2 1/8")	2145	(7' 0 3/8")
3155	(10' 4 1/4")	5	405	(1' 4")	2695	(8' 10")
3750	(12' 3 3/4")	6	455	(1' 5 7/8")	3240	(10' 7 5/8")
4345	(14' 3 1/4")	7	500	(1' 7 3/4")	3790	(12' 5 1/4")
4945	(16' 2 3/4")	8	550	(1' 9 5/8")	4340	(14' 2 7/8")
5550	(18' 2 1/4")	9	595	(1' 11 1/2")	4890	(16' 0 1/2")
6140	(20' 1 3/4")	10	645	(2' 1 3/8")	5440	(17' 10 1/8")
6735	(22' 1 1/4")	11	690	(2' 3 1/4")	5990	(19' 7 3/4")
7335	(24' 0 3/4")	12	740	(2' 5 1/8")	6540	(21' 5 3/8")
7930	(26' 0 1/4")	13	785	(2' 7")	7090	(23' 3")

Bi-parting HH/HI installations only

Max Ext "W"		Prs	Bunching		Prs	Bunching		Bunch Totals		Max Usable Width "D"	
2640	(8' 8")	2	265	(10 3/8")	2	265	(10 3/8")	530	(1' 8 3/4")	2110	(6' 11 1/4")
3235	(10' 7 1/2")	2	265	(10 3/8")	3	310	(1' 0 1/4")	575	(1' 10 5/8")	2660	(8' 8 7/8")
3830	(12' 7")	3	310	(1' 0 1/4")	3	310	(1 0 1/4")	620	(2' 0 1/2")	3210	(10' 6 1/2")
4430	(14' 6 1/2")	3	310	(1' 0 1/4")	4	360	(1' 2 1/8")	670	(2' 2 3/8")	3760	(12' 4 1/8")
5030	(16' 6")	4	360	(1' 2 1/8")	4	360	(1' 2 1/8")	720	(2' 4 1/4")	4310	(14' 1 3/4")
5625	(18' 5 1/2")	4	360	(1' 2 1/8")	5	405	(1' 4")	765	(2' 6 1/8")	4860	(15' 11 3/8")
6220	(20' 5")	5	405	(1' 4")	5	405	(1' 4")	810	(2' 8")	5410	(17' 9")
6820	(22' 4 1/4")	5	405	(1' 4")	6	455	(1' 5 7/8")	860	(2' 9 7/8")	5960	(19' 6 5/8")
7415	(24' 4")	6	455	(1' 5 7/8")	6	455	(1' 5 7/8")	910	(2' 11 3/4")	6505	(21' 4 1/4")
8010	(26' 3 1/2")	6	455	(1' 5 7/8")	7	500	(1' 7 3/4")	955	(3' 1 5/8")	7055	(23' 1 7/8")
8605	(28' 3")	7	500	(1' 7 3/4")	7	500	(1' 7 3/4")	1000	(3' 3 1/2")	7605	(24' 11 1/2")
9205	(30' 2 1/2")	7	500	(1' 7 3/4")	8	550	(1' 9 5/8")	1050	(3' 5 3/8")	8155	(26' 9 1/8")
9805	(32' 2")	8	550	(1' 9 5/8")	8	550	(1' 9 5/8")	1100	(3' 7 1/4")	8705	(28' 6 3/4")
10400	(34' 1 1/2")	8	550	(1' 9 5/8")	9	595	(1' 11 1/2")	1145	(3' 9 1/8")	9255	(30' 4 3/8")
10995	(36' 1")	9	595	(1' 11 1/2")	9	595	(1' 11 1/2")	1190	(3' 11")	9805	(32' 2")
11595	(38' 0 1/2")	9	595	(1' 11 1/2")	10	645	(2' 1 3/8")	1240	(4' 0 7/8")	10355	(33' 11 5/8")
12190	(40' 0")	10	645	(2' 1 3/8")	10	645	(2' 1 3/8")	1290	(4' 2 3/4")	10900	(35' 9 1/4")
12785	(41' 11 1/2")	10	645	(2' 1 3/8")	11	690	(2' 3 1/4")	1335	(4' 4 5/8")	11450	(37' 6 7/8")
13380	(43' 11")	11	690	(2' 3 1/4")	11	690	(2' 3 1/4")	1380	(4' 6 1/2")	12000	(39' 4 1/2")
13980	(45' 10 1/2")	11	690	(2' 3 1/4")	12	740	(2' 5 1/8")	1430	(4' 8 3/8")	12550	(41' 2 1/8")
14580	(47' 10")	12	740	(2' 5 1/8")	12	740	(2' 5 1/8")	1480	(4' 10 1/4")	13100	(42' 11 3/4")
15175	(49' 9 1/2")	12	740	(2' 5 1/8")	13	785	(2' 7")	1525	(5' 0 1/8")	13650	(44' 9 3/8")
15770	(51' 9")	13	785	(2' 7")	13	785	(2' 7")	1570	(5' 2")	14200	(46' 7")

Head Design

Under the rolling load of the door, 36.6 kg/m″ (7° lbs/ft″) x door area, the lintel design must not permit the top track to deflect more than 13 (°). Door area being height x W1 or W.

It will be seen that the load imposed in arrangement 2 is directly below the lintel whereas with arrangement 1 the additional cantilever effect must be considered; this also applies to a lesser degree with arrangement 3.
The track support brackets require a single bolt fixing for the HG, whereas for the HH and HI shutters two bolts for each bracket are required. Bracket spacing will be determined by consideration of both width and height of opening, details will be provided.

For concrete lintels ° " BSW through or ragbolts with 38 (1°") thread projection should be supplied and fitted by others. For steelwork we will generally require 14 dia. (9/16") holes by others, however we shall be pleased to advise further upon receipt of your opening details.

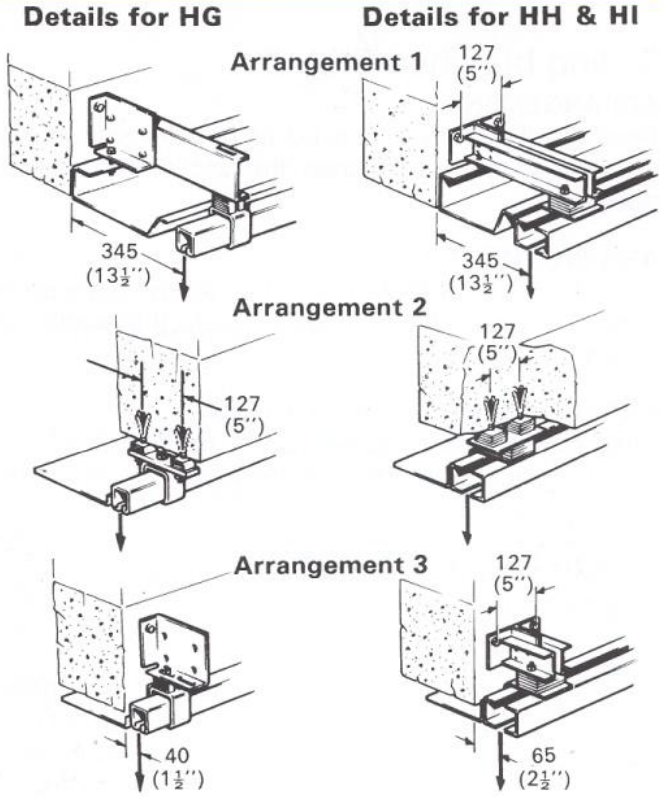

Security

STANDARD
Hasp and staple padlocking facilities are fitted to the inside and outside to enable positive locking from either side. Padlock to be provided by others. The staples are fitted to the leadpost on single doors.

OPTIONAL
An eight lever deadlock system can be incorporated. Operating handles and key apertures are provided inside and outside unless otherwise requested.

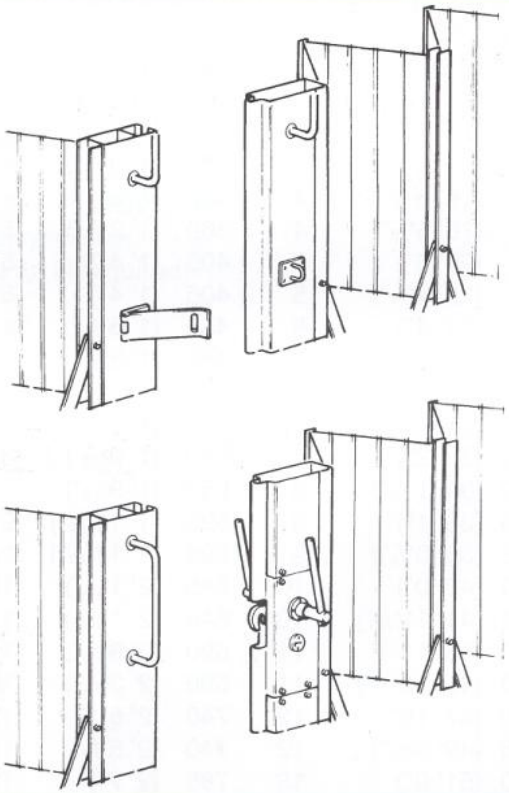

Sumps

To enable thorough cleaning of the bottom track, optional sumps can be located behind and beneath track in the bunching area. A drainage system can be coupled to the sump if it is considered that the threshold will be water collecting area.

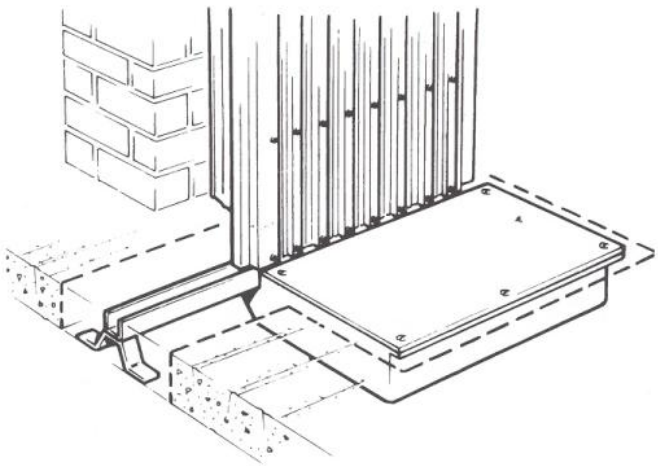

Floor Tracks

An excavation 180 (7") wide x 100 (4") deep must be provided by others to enable our skilled erectors to locate the robust channel formed bottom track, subsequently to be grouted-in by others.

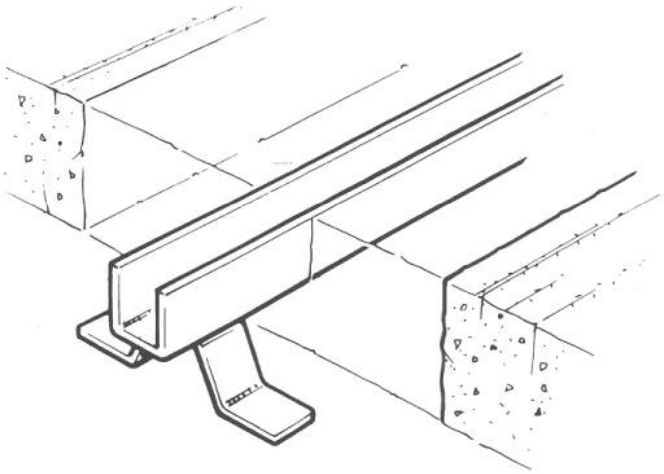

Optional Extras

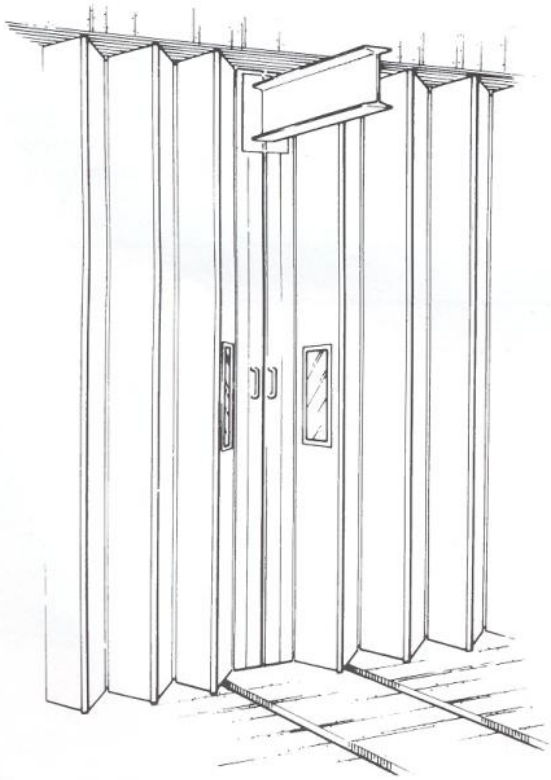

RUNWAY BEAMS
Cut-outs in standard or special extra wide leadposts can be arranged to accommodate single beams passing through bi-parting manually operated doors. Off-sets from the centre line of the opening are provided by using unequal pairs of leaves each side.

VIEWING PANELS
Viewing panels giving a clear view area of 510 (20") x 125 (5") can be incorporated. Standard glazing of 5 ($^3/_{16}$") toughened glass. Non-standard sizes of glazing material can be considered.

RAILWAY LINES
Special bottom tracks can be supplied where railway lines pass through the opening.

Electric Operator

The operator can be supplied for use with either single phase or three phase mains supply. Operators have integral Torque limit - Micro switch - Drive sprocket mounting bracket, and are both compact and robust with a simple but positive clutch adjustment to suit the particular installation, providing reliable and safe operation. The drive is by means of an endless roller chain connected to the lead post and running parallel to the overhead track. Should power failure occur, the door can be converted to manual operation by simply disconnecting the drive chain from the lead post. Site wiring connections (by others) are required to be made from a mains supply isolator (by others) to the operator and control unit. A wiring diagram is provided by Wessex.

SAFETY

In the event of the door meeting an obstruction when operating under power, the torque limit operates the micro switch to switch of the mains supply to the motor.

CONTROLS

Push button operated switches marked 'open', 'close' and 'stop' are provided for location in the required position. Remote control by photo-electric cells with or without automatic closing by time relays or an induction system operating on radio control principles are available. We shall be pleased to provide advice on a control system when your requirements are known.

APPLICATION

Power operation can be provided for installation arrangements 1, 2 and 3 within the same clearances required for manually operated doors, and this feature allows manually operated doors to be converted to power operation at a later date than the initial installation.

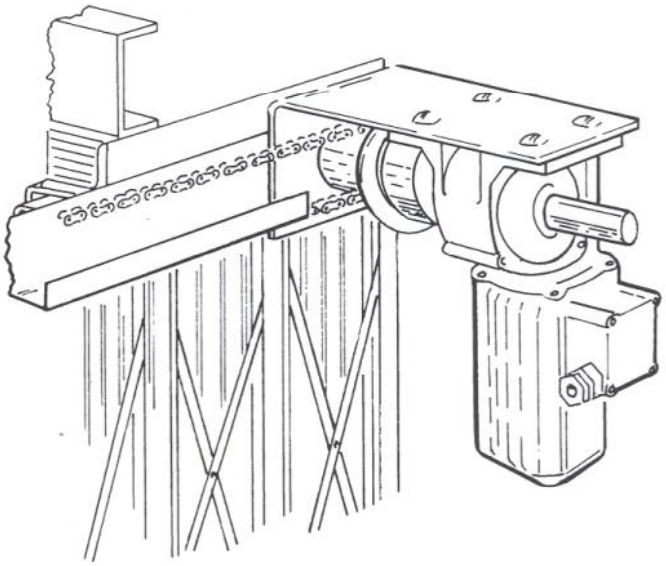

INSTALLATION

We will undertake to supply a skilled and comprehensive door erection service. Preparation of the opening, grouting of floor track and in the case of power operated doors, final connection of power supply as detailed, shall be the responsibility of others.

WESSEX INDUSTRIAL DOORS

Artillery Road
Lufton Trading Estate
Yeovil, Somerset BA22 8RP

Telephone: 01935 473708 / 473851
Fax: (01935) 479413
Email: enquiries@wessexindustrialdoors.com
Website: www.wessexindustrialdoors.com